CERAMIC PRESSURE CELL CPS 1102

This monolithic ceramic pressure measuring cell has a diameter of only 10 mm and is suitable for measuring gauge pressure up to 400 bar.

Advantages
– Diameter 10 mm
– High measurement accuracy
– Temperature-compensated offset
– Excellent long-term stability

Application examples
– Pumps
– Pressure transmitters
– Heating and cooling systems
– Pressure monitoring

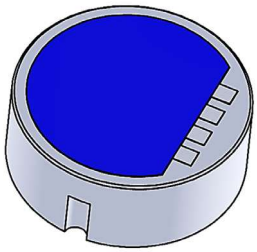

General data	
Sensor technology	Piezoresistive, Wheatstone bridge
Sensor type	Monolitic, gauge pressure

Electrical data	
Pressure range	-1 to 400 bar
Supply voltage	3 to 30 VDC
Output signal	Analog
Current consumption	≤ 1.2 mA at 10 VDC
Sensitivity	Min. 0.9 / typ. 1.5 / max. 3.0 mV/V
Offset	0 ±0.05 mV/V
Temperature Coefficient of Span	0 to -0.04 % FS/K (-40 to +125 °C)
Temperature Coefficient of Offset	0 ±0.03 % FS/K (20 to 85 °C) Compensated

Mechanical data	
Dimensions	See drawing
Diameter	10 mm
Pitch	1.27 mm
Weight	≤ 5 g

Environmental data	
Operating temperature	-40 to +125 °C*
Storage temperature	-40 to +150 °C

*The operating temperature range may vary depending on the electrical connection.

Material	
Sensor body	Ceramic Al_2O_3 96 % Others on request

Electrical connection	
	Solder pad tinned Cable Others on request

Nominal pressure									
		5 bar	10 bar	20 bar	50 bar	100 bar	150 bar	200 bar	400 bar
Gauge pressure		•	•	•	•	•	•	•	•
Overpressure*	bar	≤ 7.5	≤ 15	≤ 30	≤ 75	≤ 150	≤ 200	≤ 300	≤ 550
Burst pressure	bar	≥ 10	≥ 25	≥ 50	≥ 150	≥ 250	≥ 375	≥ 450	≥ 700
Vaccum capability	bar	-0.8	-1	-1	-1	-1	-1	-1	-1
Accuracy** typ. / max.	% FS	0.25 / 0.5	0.25 / 0.5	0.25 / 0.5	0.25 / 0.5	0.25 / 0.5	0.25 / 0.5	0.25 / 0.5	0.25 / 0.5

* The specified overpressure ensures correct functioning of the cell in the event of overload. Duration of overpressure < 1 s
** Basis of calculation:

$$\text{Accuracy} = \sqrt{\text{Nonlinearity}^2 + \text{Hysteresis}^2 + \text{Nonrepeatability}^2}$$

CERAMIC PRESSURE CELL CPS 1102

Dimensions

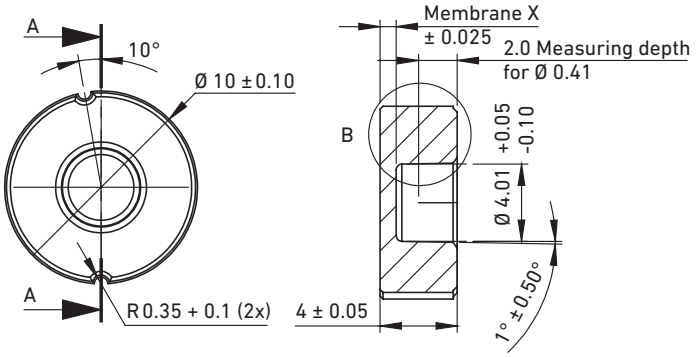

Mounting proposal

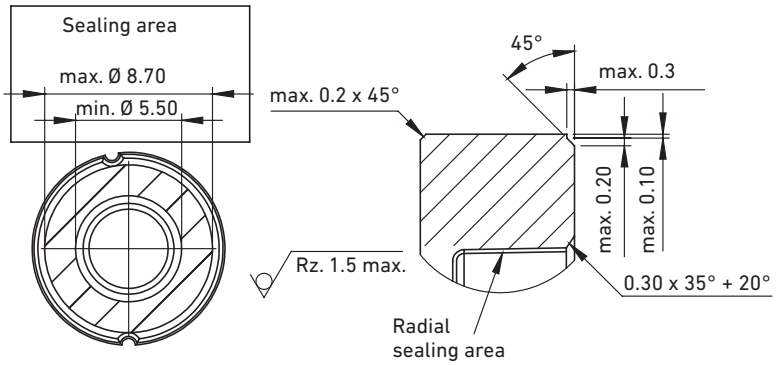

All dimensions in mm

Connection diagram

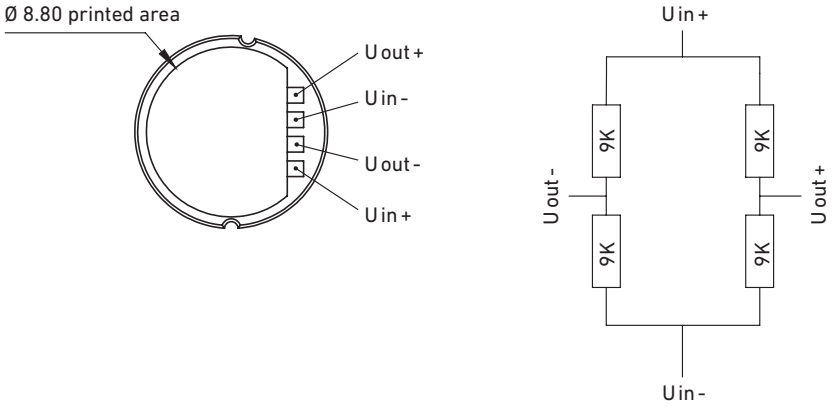

Electrical connection

Solder pad tinned

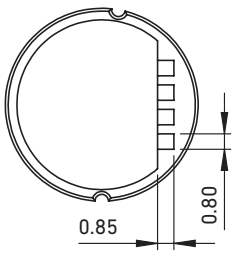

Cable

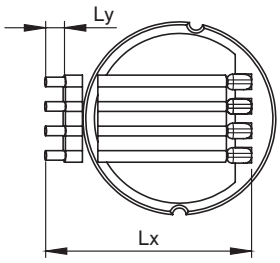

Metallux cannot picture the customer's operating and application conditions and the customer's existing environmental influences.
We therefore recommend that you carry out your own investigations into the planned use of the products under the actual operating conditions.

We continuously improve our products and also update our data sheets regularly. In this respect, there may be changes in the specification.
These changes will apply to orders received by us from the time of the update, unless otherwise agreed.

Our products comply with Directive 2011/65/EU (RoHS) including Directive 2015/863/EU and Regulation (EC) No. 1907/2006 (REACH).