# CERAMIC PRESSURE CELL CPS 2184

**This flush-mounted ceramic pressure measuring cell has a diameter of 18 mm and is suitable for measuring gauge, absolute and sealed gauge pressure.**

**It is available for pressure ranges from -1 to 600 bar and as a Z variant with signal amplification (see CPS 2184 Z).**

**Due to the flush-mounted membrane, the measuring cell is easy to clean and is therefore also suitable for hygienic applications or viscous media.**

**Advantages**
– Compact design
– High measurement accuracy
– Good media resistance
– Excellent long-term stability

**Application examples**
– Pumps
– Pressure transmitters
– Heating and cooling systems
– Medical technology

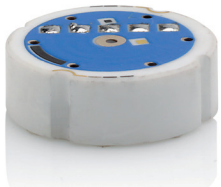



| General data | |
|---|---|
| Sensor technology | Piezoresistive, Wheatstone bridge |
| Sensor type | Flush-mounted,<br>Gauge, absolute and sealed gauge pressure |

| Electrical data | |
|---|---|
| Pressure range | -1 to 600 bar |
| Supply voltage | 3 to 30 VDC |
| Output signal | Analog |
| Current consumption | ≤ 1.2 mA at 10 VDC |
| Offset | 0 ±0.2 mV/V |
| Temperature Coefficient of Span | 0 to -0.013 % FS/K (0 to 70 °C)<br>0 to -0.015 % FS/K (-20 to 0 °C and 70 to 85 °C)<br>0 to -0.018 % FS/K (-40 to 0 °C and 85 to 135 °C) |
| Temperature Coefficient of Offset | 0 ±0.03 % FS/K (20 to 85 °C)<br>Compensated |

| Mechanical data | |
|---|---|
| Dimensions | See drawing |
| Diameter | 18 mm |
| Pitch | 2.54 mm |
| Weight | < 5 g |

| Environmental data | |
|---|---|
| Operating temperature | -40 to +135 °C* |
| Storage temperature | -40 to +150 °C |

*The operating temperature range may vary depending on the electrical connection.

| Material | |
|---|---|
| Sensor body | Ceramic $Al_2O_3$ 96 %<br>Others on request |

| Electrical connection |
|---|
| Solder pad tinned |
| Solder pin |
| Cable |
| Others on request |

| Nominal pressure | | 0.5 bar | 1 bar | 2 bar | 5 bar | 10 bar | 20 bar | 50 bar | 100 bar | 200 bar | 400 bar | 600 bar |
|---|---|---|---|---|---|---|---|---|---|---|---|---|
| Gauge pressure | | • | • | • | • | • | • | • | | | | |
| Absolute pressure | | | • | • | • | • | • | • | | | | |
| Sealed gauge pressure | | | | | | | | | • | • | • | • |
| Overpressure | bar | ≤ 1 | ≤ 1.5 | ≤ 3 | ≤ 7.5 | ≤ 15 | ≤ 30 | ≤ 75 | ≤ 150 | ≤ 300 | ≤ 500 | ≤ 700 |
| Burst pressure | bar | ≥ 1.5 | ≥ 2.5 | ≥ 5 | ≥ 12 | ≥ 25 | ≥ 40 | ≥ 100 | ≥ 250 | ≥ 400 | ≥ 600 | ≥ 900 |
| Vacuum strength | bar | -0.1 | -0.4 | -0.6 | -1 | -1 | -1 | -1 | -1 | -1 | -1 | -1 |
| Sensitivity | mV/V | 1.5 – 2.5 | 2.1 – 3.1 | 2.1 – 3.1 | 2.5 – 3.5 | 3.7 – 4.7 | 2.5 – 3.5 | 4.2 – 5.2 | 3.7 – 4.7 | 2.8 – 3.8 | 3.5 – 4.5 | 2.1 – 3.1 |
| Accuracy** typ./max. | % FS | 0.5 / 0.9 | 0.5 / 0.9 | 0.4 / 0.8 | 0.4 / 0.8 | 0.4 / 0.6 | 0.4 / 0.6 | 0.4 / 0.6 | 0.5 / 0.8 | 0.5 / 0.9 | 0.5 / 0.9 | 0.5 / 0.9 |

* The specified overpressure ensures correct functioning of the cell in the event of overload. Duration of overpressure < 1 s
** Basis of calculation:

$$\text{Accuracy} = \sqrt{\text{Nonlinearity}^2 + \text{Hysteresis}^2 + \text{Nonrepeatability}^2}$$

# CERAMIC PRESSURE CELL CPS 2184

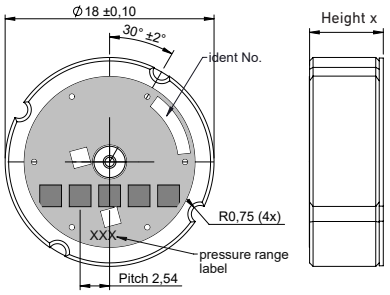


Round diaphragm

| Round diaphragm | | |
|---|---|---|
| **Nominal pressure** | **Height** | **Tolerance** |
| **bar** | **mm** | **mm** |
| 0.5 | 6.13 | ± 0.15 |
| 1 | 6.20 | ± 0.15 |
| 2 | 6.25 | ± 0.15 |
| 5 | 6.30 | ± 0.15 |
| 10 | 6.35 | ± 0.15 |
| 20 | 6.55 | ± 0.15 |
| 50 | 6.70 | ± 0.15 |

| Octogonal diaphragm | | |
|---|---|---|
| **Nominal pressure** | **Height** | **Tolerance** |
| **bar** | **mm** | **mm** |
| 100 | 6.70 | ± 0.15 |
| 200 | 7.05 | ± 0.15 |
| 400 | 7.35 | ± 0.20 |
| 600 | 7.55 | ± 0.20 |

## Mounting proposal

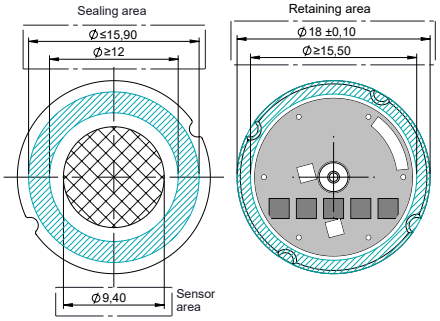


Round diaphragm
0.5 – 50 bar

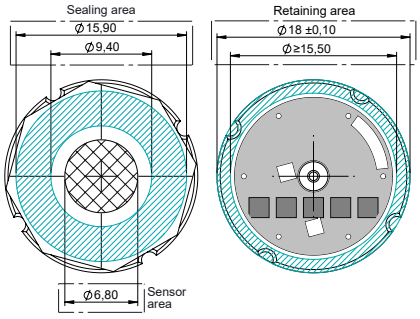


Octogonal diaphragm
100 – 600 bar

## Connection diagram

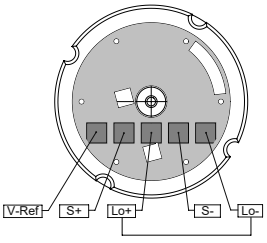


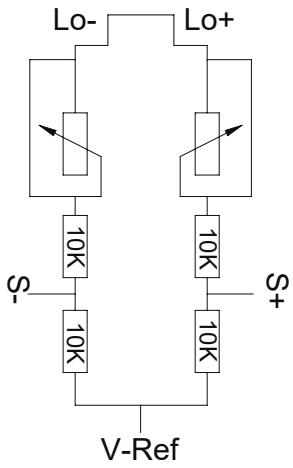


## Electrical connection

**Solder pad**

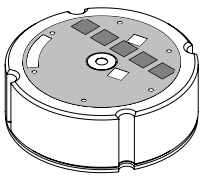

**Cable**
AWG24, Length 45 mm

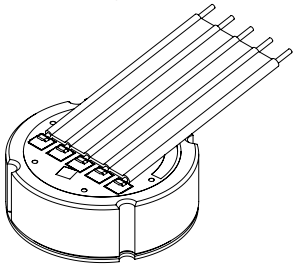

**Solder pin**
0.5 x 0.27 mm, Length max. 13 mm

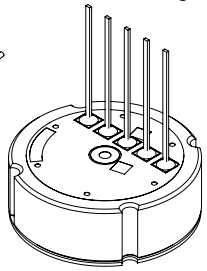

All dimensions in mm

Metallux cannot picture the customer's operating and application conditions and the customer's existing environmental influences.
We therefore recommend that you carry out your own investigations into the planned use of the products under the actual operating conditions.

We continuously improve our products and also update our data sheets regularly. In this respect, there may be changes in the specification.
These changes will apply to orders received by us from the time of the update, unless otherwise agreed.

Our products comply with Directive 2011/65/EU (RoHS) including Directive 2015/863/EU and Regulation (EC) No. 1907/2006 (REACH).