metallux

THUMB, FINGER AND HAND JOYSTICKS

Ergonomic.
Precise.
Modular.

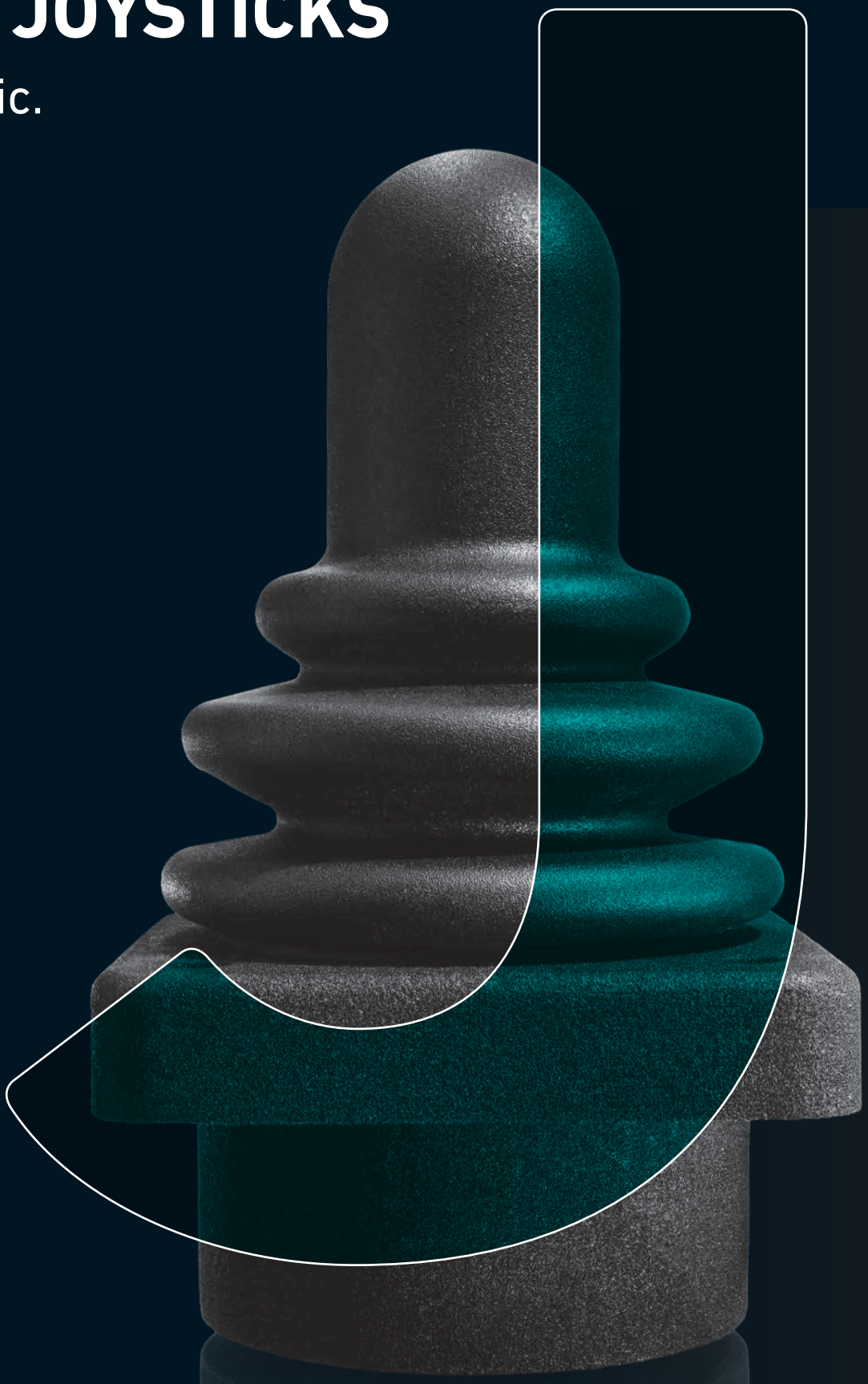

Sensors, Resistors and Joysticks

Metallux AG is an internationally active, medium-sized company based in Leutenbach near Stuttgart.

With over 160 employees, we have been developing and manufacturing sensors, resistors and industrial joysticks for over 35 years.
From the standard product to customer-specific solutions – that is our strength.

What sets us apart:

– Reliable and durable products for demanding applications
– Individual and personal advice
– Extensive portfolio from the standard range to tailor-made, individual solutions
– Development and production in Germany
– Small-scale to large-scale production

You can rely on that.



Pressure sensors



Joysticks

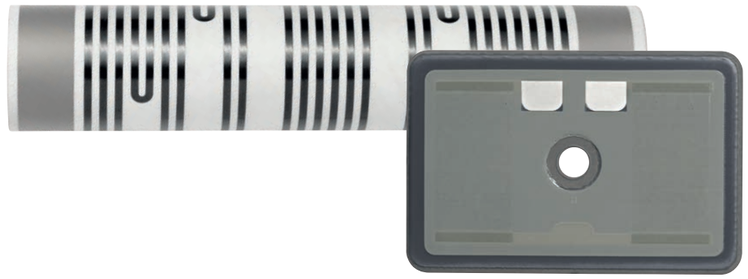

High-voltage resistors

Power resistors



Linear sensors



Rotary sensors

You have the choice

Industrial joysticks have become an indispensable part of modern control systems. They play a central role in radio remote controls as well as in the drive and function control of a wide variety of machines and vehicles - from agricultural technology to medical technology.

Ergonomic, robust and adaptable

Our portfolio includes thumb, finger and hand joysticks that are characterized by the following features:
– Ergonomic design for comfortable operation
– High precision and reliability, even under harsh conditions
– Compact design with low weight
– Durability and safety
– Available with Hall or Potentiometer technology

Thumb joysticks



Finger joysticks









Hand joysticks



Joysticks for every move

Our joysticks are used in a wide range of applications.

Agriculture and forestry:
Tractors, agricultural machinery, harvesters

Construction machinery:
Wheel loaders, excavators, cranes

Municipal vehicles:
Sweepers, garbage trucks

Industrial trucks:
Forklifts, aerial work platforms

Watercraft:
Ships, boats, motor yachts, water scooters

Medical technology:
Wheelchairs, medical devices

Radio remote controls

Armrests

**Standard or tailor-made –
You decide**

In addition to an extensive standard range, we develop individual joystick solutions that are tailored precisely to your requirements.

Thanks to our modular system, we can respond to your requests quickly and efficiently. The specialists at Metallux support you from the initial idea to series production, always finding the optimal solution – for every application and every field of use.



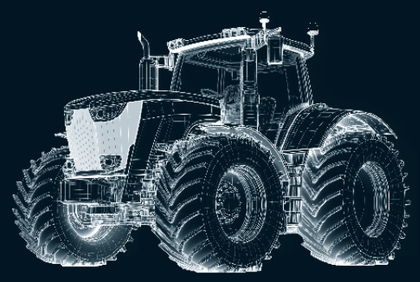

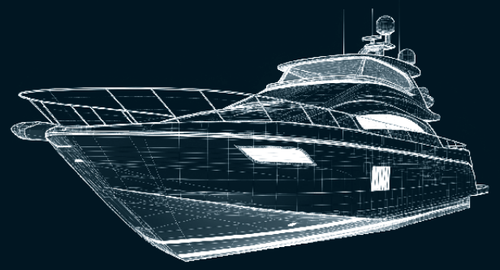

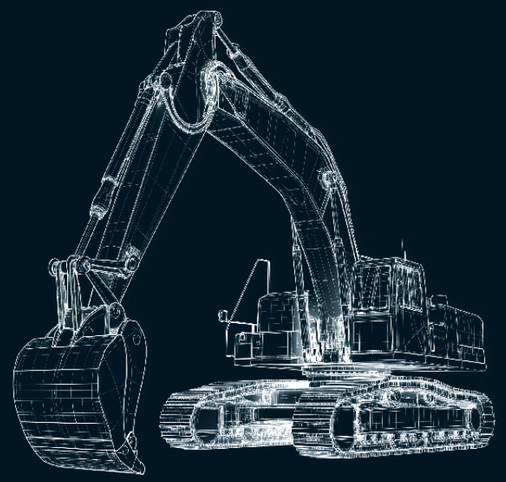



Portfolio Overview

		Thumb joysticks		Finger joysticks						Hand joysticks	
		 MJ-T10	 MJ-T11	 MJ-F11	 MJ-F16	 MJ-F12	 MJ-F13	 MJ-F14	 MJ-F15	 MJ-H10	 MJ-H11
Components	Complete system	●	●	●	●	●	●	●	●	●	●
	Base									●	●
	Handle									●	
Number of Axes	1-axle	●	●	●	●	●	●		●	○	●
	2-axle	●	●			●	●	●	●	●	●
	3-axle					●	●		●		●
	Multiaxial									●	○
Sensor Technology	Potentiometer			●		●	●			●	
	Hall	●	●	●	●			●	●	●	●
Interfaces	Potentiometer analog			●		●	●			●	
	Potentiometer for detent steps, digital					●	●			●	
	Potentiometer Gray-Code					●	●			●	
	Hall ratiometric 0.5 - 4.5 V	●	●	●	●			●	●	●	●
	CANOpen									●	○
	SAE J1939									●	○
	SPI	○	○		○			●	●	●	●
	PWM	○	○		○			○	○	○	○
Mechanical options	Spring return to center	●	●	●	●	●	●	●	●	●	●
	Spring return to center, reduced operating force					●	●			○	
	Spring return to end			●	●						
	1 – 5 detent steps, spring return to center				●	●	●				
	1 – 4 detent steps, locking				●	●	●				
	Stepless locking			●		●	●				
	Max. deflection angle x and y	22.5°	25.5°	30°	30°	26°	26°	19°	19°	20°	20°
Limiters	Square,					●	●		●	●	●
	Square, soft guided feel					●	●		●	●	●
	Round	●	●			○	○	●	●	●	●
	Round, soft guided feel	●	●			○	○		●	●	●
	Cross gate	○	●			●	●		●	○	○
	Single axis	●	●	●	●	●	●		●	○	○
Handle Functions	With integrated Push Button (Deadman)					●	●		●		
	With external Push Button (Deadman)					●	●				
	LED Lighting				○						
	Vibration				○						
	Control Panel configurable				○				○	●	●
	Handle length mm	12.7	23	55 / 65	56.6 up to 76.4	55 up to 70	55 / 65	51.4 up to 56.3	52.1 up to 63.1	200	38.7 / 45.2
Installation Data	Mounting Cutout	Ø 13.4	Ø 22.1	25 × 10.3	23 × 19	Ø 35	Ø 49	Ø 35.2	Ø 38.8	70 × 70	Ø 45 / 20.5
	Installation depth	12.7	14.1	9.4	9.4	41 up to 62	37.5 up to 62	17.6	17 / 25	44	25.5 / 19
	Mounting Location	below	below	below	below	below	below	below	above / below	above	above / below

Further configurations on request

Legend: ● Standard ○ Optional All dimensions in mm

Sensor technologies and interfaces

Two technologies – for your individual requirements
Our joysticks are available in two proven technologies: Hall technology and potentiometer technology. Each offers specific advantages so that you can choose the best solution for your application.

Hall technology – Robust and precise for demanding environments
– Contactless and wear-free: For a long service life even under intensive use
– High reliability and precision: Ideal for harsh environments with strong vibrations or mechanical stress
– Flexible signal output: Available with analog and digital interfaces such as CAN bus, SPI or SAE J1939
– Perfect for demanding applications: Particularly suitable for areas of application where durability and reliability are crucial

Potentiometer technology – Simple and versatile
– Easy integration: Compatible with existing control systems
– Absolute measurement: No reference run necessary
– Energy efficient and durable: Minimal power consumption and long service life
– Precise analog signal output: Perfect for applications that require stable and precise control
– Flexibility due to in-house production: Adaptation to individual requirements possible, e.g. specific output signals or voltage ranges

Both technologies are available in redundant versions and meet the highest safety requirements.

Mechanical options

The axis functions of the joysticks are as diverse as their application areas

Spring return to center or spring return to end
When the joystick is not operated, a spring returns it to the center position. In some models it returns to the end position.

Detent steps – spring return to center
The joystick can be moved in up to 5 detent steps. When you let go, it moves back to the center position.

Detent steps – locking
The joystick locks in each detent step and in the center position. Up to 5 locking detent steps are possible.

Stepless locking
The joystick can be moved steplessly and remains in any position when released. An additional detent step in the center position can be integrated.

The deflection angles in X and Y depend on the respective model and can be found in the table on pages 8/9.

Limiter Options

The limiter defines the area in which the joystick can be moved. Depending on the shape, the range of movement is more or less restricted.

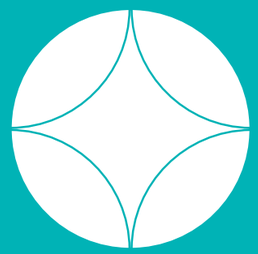

Round,
soft guided feel

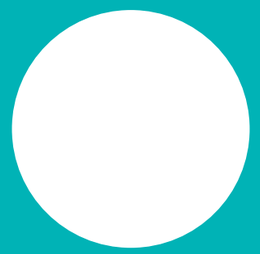

Round,
no guided feel

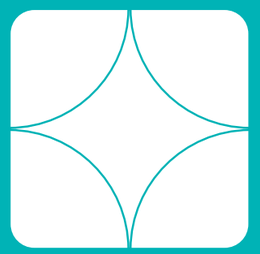

Square,
soft guided feel

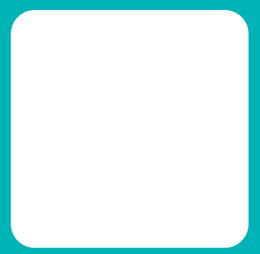

Square,
no guided feel



Cross gate



Single axis
y-axis active
x-axis blocked



Single axis
x-axis active
y-axis blocked

Handle designs and dimensions

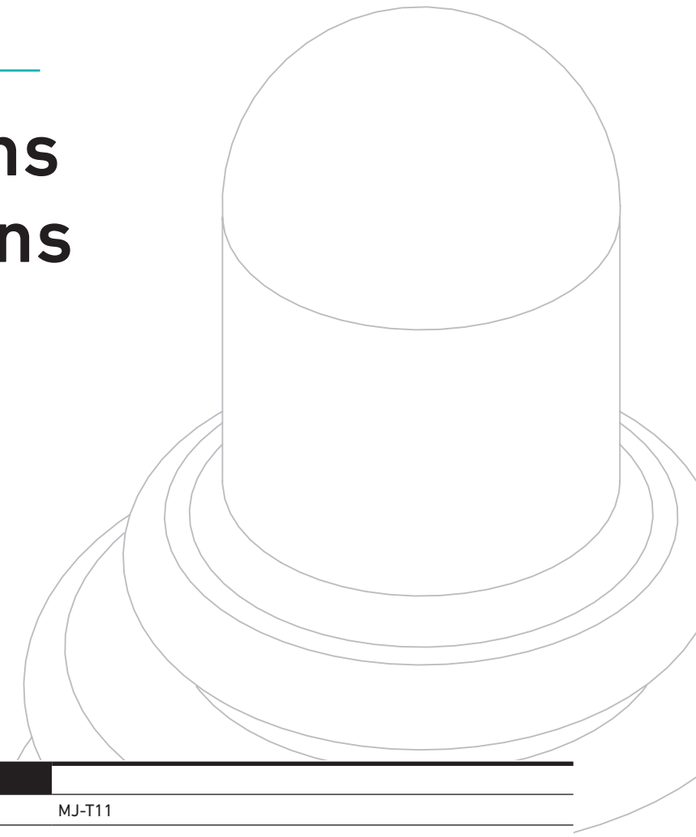

Thumb joysticks

MJ-T10

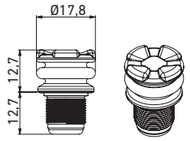

MJ-T11

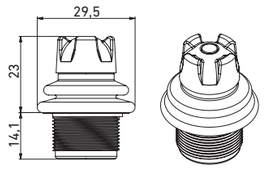

Hand joysticks

MJ-H10

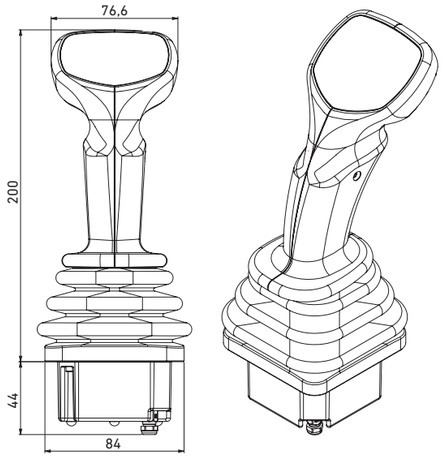

MJ-H11

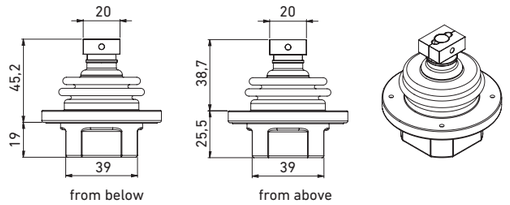

All dimensions in mm

Finger joysticks

MJ-F11

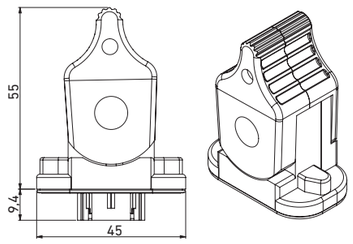

MJ-F03

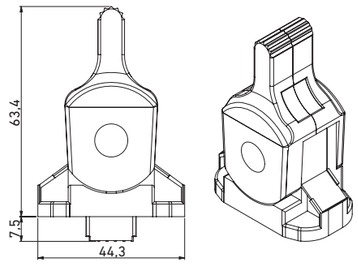

MJ-F16 Handle Shape A | short

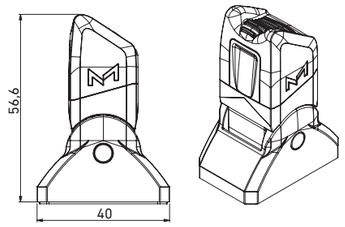

MJ-F16 Handle Shape B

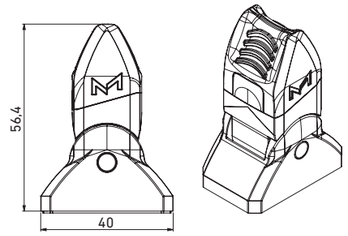

MJ-F16 Handle Shape A | medium

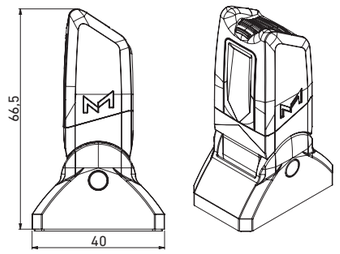

MJ-F16 Handle Shape A | long

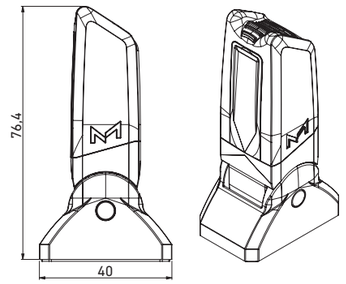

MJ-F12 3-axle, z-axis with rubber ring

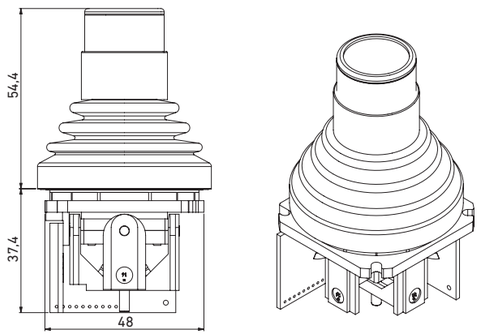

MJ-F12 3-axle, z-axis with ribs

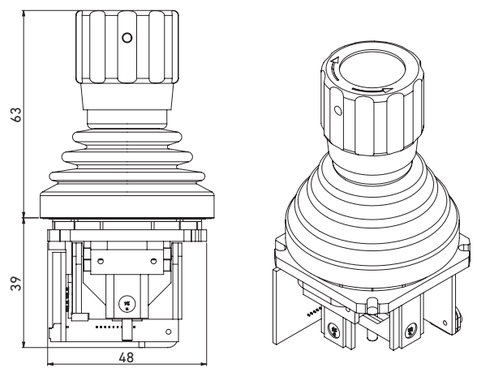

MJ-F12 Integrated push button

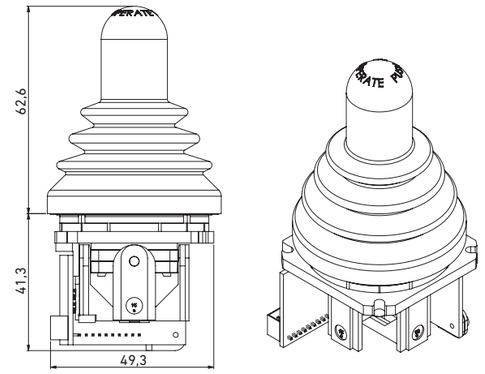

MJ-F12 External push button

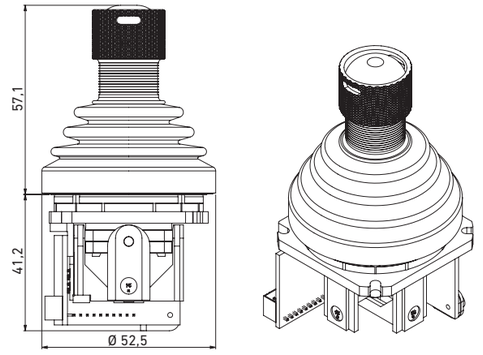

MJ-F13 Closed rubber boot

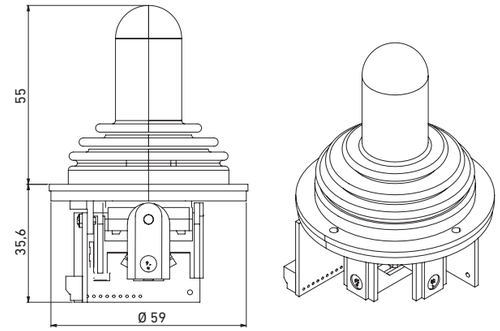

MJ-F13 Closed rubber boot

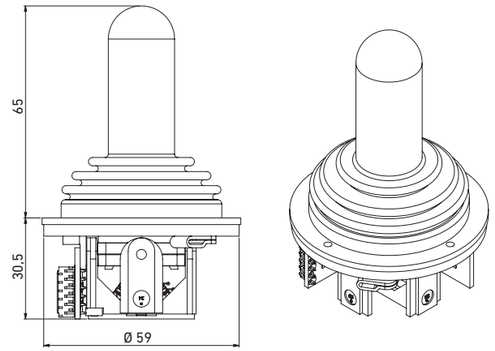

MJ-F14 Closed rubber boot

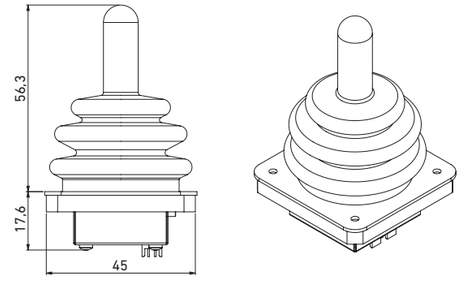

MJ-F14 Open rubber boot

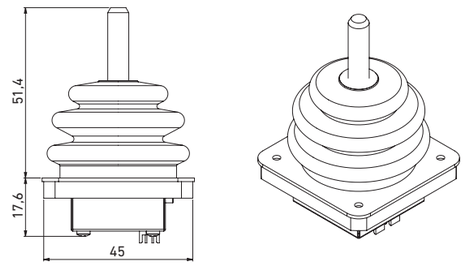

MJ-F15 Closed rubber boot, installation from below

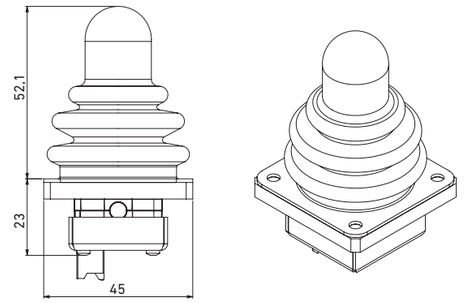

MJ-F15 Integrated push button, installation from above

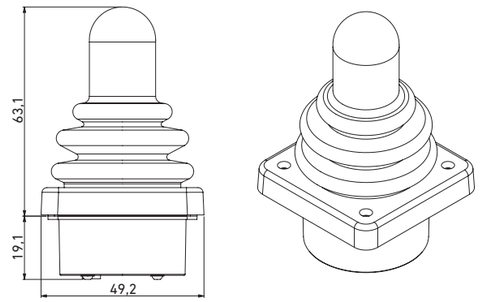

All dimensions in mm

metallux

The great feeling of being understood and perfectly looked after from a technical perspective – that's a constituent part of our corporate philosophy. Customers and business partners appreciate this attitude and reward us with many years of loyalty.

Our versatile creativity brings many advantages, especially for our business partners. We create optimal solutions in the fields of sensor systems, resistor technology and joysticks.

Our customers can be sure:
whatever challenge has to be solved
with whatever product – we'll find a way!



Metallux AG

Robert-Bosch-Str. 29
71397 Leutenbach
Germany
Phone +49 7195 5980-0
info@metallux.de
www.metallux.ag

Specifications and technical data may change without prior notice. Concept: www.absicht.ag © Metallux AG | 04/2025.