FINGER JOYSTICK MJ-F12 (prev. MJ-2K)

The MJ-F12 series with potentiometer technology is characterized by precise control and low power consumption.

The 1-, 2- or 3-axis joystick is available in numerous variants.

The MJ-F12 and MJ-F13 series differ in their flange shape. The MJ-F12 has a square flange.

Advantages
– Robust and compact design
– Low weight
– Low installation depth
– Low power consumption

Application examples
– Remote Controls
– Boat controls
– Forklifts
– Aerial work platforms

Electrical data	
Sensor technology	Potentiometer
Resistance value	1.75 kΩ, 2.5 kΩ, 5 kΩ, 10 kΩ Others on request
Supply voltage	3 – 30 VDC
Tolerance center position	±0.5 % to ±1.5 % FSO
Tolerance max. deflection	±1 % bis ±2.5 % FSO configuration-dependent
Wiper current	≤ 1 mA max. 5 mA in case of malfunction
Independent Linearity	±2 %
Interface	Potentiometer 0 – 100 % Potentiometer 10 – 90 % Potentiometer 7.5 – 92.5 % Potentiometer for detent steps, digital Potentiometer Gray Code and center contact
Resolution	Analog

Electrical connection
Solder connection Hirose DF3 12 pole Molex PicoBlade 53048 Amphenol Dubox 6 oder 8 pole Others on request

Environmental data	
Operating temperature	-25 °C to +70° C -40° C optional
Storage temperature	-40 °C to +85° C
Protection level acc. to IEC 60529	IP 67 above sealing
EMC Immunity acc. to	EN IEC 61000-6-2
EMC Emission acc. to	EN IEC 61000-6-4

Mechanical data	
Number of axes	1, 2 or 3
Dimensions	See drawings
Weight	approx. 25 g
Operating force	5 N ±1,5 N 3 N optional
Max. vertical load	< 500 N
Max. tilt load	< 200 N
Deflection angle X and Y	±26° Others on request
Deflection angle Z	±37°
Centering	Single spring
Mounting	M2.5 x 16 for 3 mm mounting plate, mounting ring Screwed from below
Mechanical option	Spring return to center Spring return to center, reduced operating force Detent steps, spring return to center Detent steps, locking Stepless locking
Limiter	Square Square, soft guided feel Round Round, soft guided feel Cross gate Single axis in X or Y
Lifetime	> 5 million cycles

Material	
Housing	Aluminium
Bearing	Stainless steel/plastic
Rubber boot	Neoprene
Handle	Plastic

Handle design
Handle length 55 to 70 mm Handle with rubber boot, closed Handle with rubber boot, open

Handle function
Push button / Deadman switch, internal Push button / Deadman switch, external

FINGER JOYSTICK MJ-F12 (prev. MJ-2K)

Dimensions

3-axis, Z-axis with rubber boot

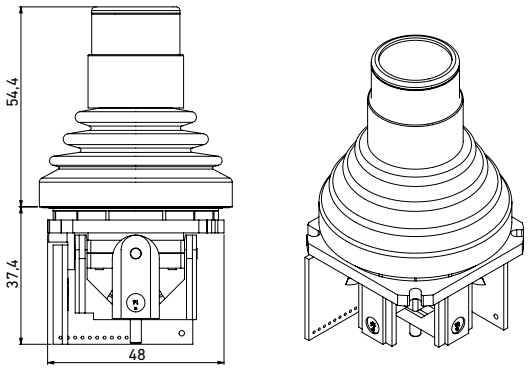

3-axis, Z-axis with ribs

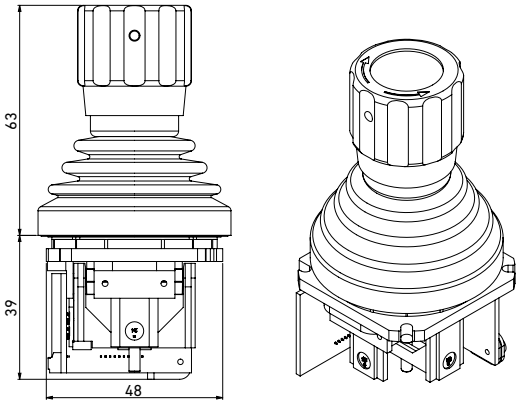

Integrated push button

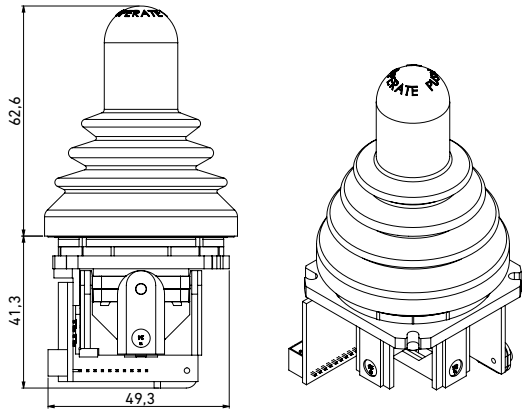

External push button

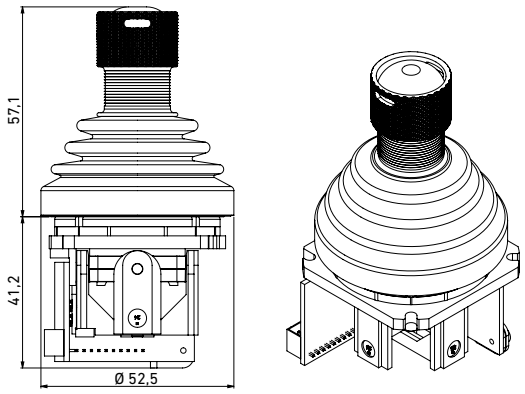

Without push button

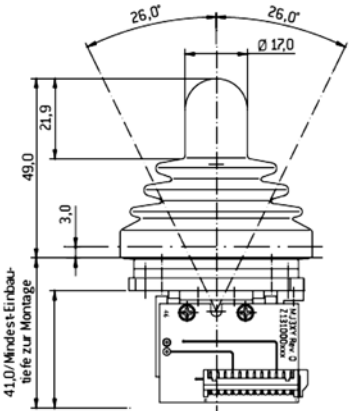

Mounting/Mounting Cutout

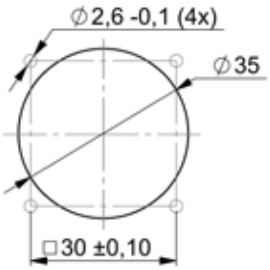

All dimensions in mm

Metallux cannot picture the customer's operating and application conditions and the customer's existing environmental influences.
We therefore recommend that you carry out your own investigations into the planned use of the products under the actual operating conditions.

We continuously improve our products and also update our data sheets regularly. In this respect, there may be changes in the specification.
These changes will apply to orders received by us from the time of the update, unless otherwise agreed.

Our products comply with Directive 2011/65/EU (RoHS) including Directive 2015/863/EU and Regulation (EC) No. 1907/2006 (REACH).

FINGER JOYSTICK MJ-F12 (prev. MJ-2K)

Product codes for orders

		X-axis X_ _ _	Y-axis Y_ _ _	Z-axis Z_ _ _
Sensor technology				
0	None	**0**	**0**	**0**
P	Potentiometer	**P**	**P**	**P**
M	Membrane potentiometer	**H**	**H**	**H**
Interface				
00	None	**00**	**00**	**00**
01	Potentiometer 0 – 100 % with directional switch	**01**	**01**	**01**
02	Potentiometer 0 – 100 % with directional switch and center contact	**02**	**02**	**02**
03	Potentiometer 0 – 100 % redundant	**03**	**03**	**03**
04	Potentiometer 0 – 100 % redundant, center contact	**04**	**04**	**04**
05	Potentiometer 0 – 100 % reverse redundant	**05**	**05**	**05**
06	Potentiometer 0 – 100 % reverse redundant, center contact	**06**	**06**	**06**
07	Potentiometer 10 – 90 % with directional switch	**07**	**07**	**07**
08	Potentiometer 10 – 90 % with directional switch and center contact	**08**	**08**	**08**
09	Potentiometer 10 – 90 % redundant	**09**	**09**	**09**
10	Potentiometer 10 – 90 % redundant, center contact	**10**	**10**	**10**
11	Potentiometer 10 – 90 % reverse redundant	**11**	**11**	**11**
12	Potentiometer 10 – 90 % reverse redundant, center contact	**12**	**12**	**12**
13	Potentiometer for detent steps, digital	**13**	**13**	**13**
14	Potentiometer for detent steps, center contact, digital	**14**	**14**	**14**
15	Potentiometer Gray Code and center contact	**15**	**15**	**15**
25	Membrane potentiometer	**25**	**25**	**25**
26	Potentiometer 7.5 – 92.5 % with directional switch	**26**	**26**	**26**
99	Custom	**99**	**99**	**99**
Mechanical option				
A00	None	**A00**	**A00**	**A00**
A01	Spring return to center	**A01**	**A01**	**A01**
A02	Spring return to center, reduced operating force	**A02**	**A02**	**A02**
A03	1 detent step, spring return to center	**A03**	**A03**	**A03**
A04	2 detent steps, spring return to center	**A04**	**A04**	**A04**
A05	3 detent steps, spring return to center	**A05**	**A05**	**A05**
A06	4 detent steps, spring return to center	**A06**	**A06**	**A06**
A07	5 detent steps, spring return to center	**A07**	**A07**	**A07**
A11	1 detent step, locking	**A11**	**A11**	**A11**
A12	2 detent steps, locking	**A12**	**A12**	**A12**
A13	3 detent steps, locking	**A13**	**A13**	**A13**
A14	4 detent steps, locking	**A14**	**A14**	**A14**
A15	5 detent steps, locking	**A15**	**A15**	**A15**
A16	Stepless locking	**A16**	**A16**	**A16**
A99	Custom	**A99**	**A99**	**A99**
Limiter				
B00	None			**B00**
B01	Square			**B01**
B02	Square, soft guided feel			**B02**
B03	Round			**B03**
B04	Round, soft guided feel			**B04**
B05	Cross gate			**B05**
B07	Single axis, Y locked, X active			**B07**
B08	Single axis, X locked, Y active			**B08**
B99	Custom			**B99**
Electrical connection				
C00	None			**C00**
C01	Solder connection			**C01**
C02	Conncector			**C02**
C99	Custom			**C99**
Handle design				
D00	No handle, only base			**D00**
D07	Handle with rubber boot, closed			**D07**
D08	Handle with rubber boot, open			**D08**
D99	Custom			**D99**
Handle function				
E00	None			**E00**
E01	Push button / Deadman switch, internal			**E01**
E02	Push button / Deadman switch, external			**E02**
E99	Custom			**E99**

Explanation of Product Codes

Each product code begins with the model name. After that, for each axis, the sensor technology, the interface, and the mechanical option are specified.
This is followed by the limiter, the electrical connection, the handle design, and the handle function.

Example for the Product Code of a typical MJ-F12: MJ-F12_XP02_A01_YP02_A01_Z000_A00_B02_C02_D07_E00
XP02_A01: X-axis with potentiometer 0 - 100 % with directional switch and center contact, spring return to center
YP02_A01: Y-axis with potentiometer 0 - 100 % with directional switch and center contact, spring return to center
Z000_A00: No Z-axis
B02_C02_D07_E00: Square limiter, soft guided feel, Connector, Handle with rubber boot closed, No handle function