HAND JOYSTICK MJ-H10 (prev. MJ-30K)

This multiaxial hand joystick is designed for precise drive and function control. State-of-the-art technology, a robust construction and an ergonomic design make it the ideal control element for demanding functions.

Advantages
– Hall or potentimeter technology
– Compact and robust design
– Low installation depth
– Freely configurable

Application examples
– Industrial trucks, forklifts and aerial work platforms
– Agricultural and construction machinery
– Municipal vehicles
– Cranes, excavators

Electrical data Hall-effect	
Sensor technology	Hall-effect
Supply voltage	3.3 to 5 VDC
Tolerance center position	±2 % FSO
Interface	0.5 – 4.5 V ratiometric at 5 VDC Redundant or reverse redundant SPI PWM
Resolution	12 bit
Supply current	Typ. 8 mA, max. 16 mA

Electrical data Potentiometer	
Sensor technology	Potentiometer
Resistance value	2.5 kΩ, 5 kΩ, 10 kΩ Others on request
Supply voltage	3 – 30 VDC
Tolerance center position	±1.5 % FSO
Tolerance max. deflection	±1 % to ±2.5 % FSO configuration-dependent
Wiper current	≤ 1 mA max. 5 mA in case of malfunction
Independent Linearity	2 %
Interface	Potentiometer 0 – 100 % Potentiometer 10 – 90 % Potentiometer 7.5 – 92.5 % Potentiometer Gray Code
Resolution	Analog

Electrical data CAN bus	
Sensor technology	Hall-effect
Supply voltage	8 to 32 VDC
Tolerance center position	±2 % FSO
Interface	CANOpen SAE J1939
Resolution Output Signal X-Y	min. 8 bit, max. 12 bit
Supply current	30 – 60 mA
Baudrate	250, 500, 1000 kbit/s
Digital I/O	Standard: 7, Extended: 15
Analog inputs	Standard: 2, Extended: 11

The wide range of possible configurations and communication protocols/mapping cannot be fully represented here.
Please contact us with your specific requirements.



Mechanical data	
Number of axes	Multiaxial
Dimensions	See drawings
Weight	approx. 600 g
Operating force	13 N ±2 N
Max. vertical load	< 1000 N
Max. tilt load	< 500 N
Deflection angle	±20°
Mounting	Screwed from above
Mechanical option	Spring return to center
Limiter	Square Square, soft guided feel Round Round, soft guided feel
Lifetime	> 10 million cycles

Electrical connection	
	Cable Others on request

Environmental data	
Operating temperature	-20 °C to +85° C
Storage temperature	-40 °C to +85° C
Protection level acc. to IEC 60529	IP 53
EMC Immunity acc. to	EN IEC 61000-6-2
EMC Emission acc. to	EN IEC 61000-6-4

Handle function	
	Configurable control panel

HAND JOYSTICK MJ-H10 (prev. MJ-30K)

Drawings

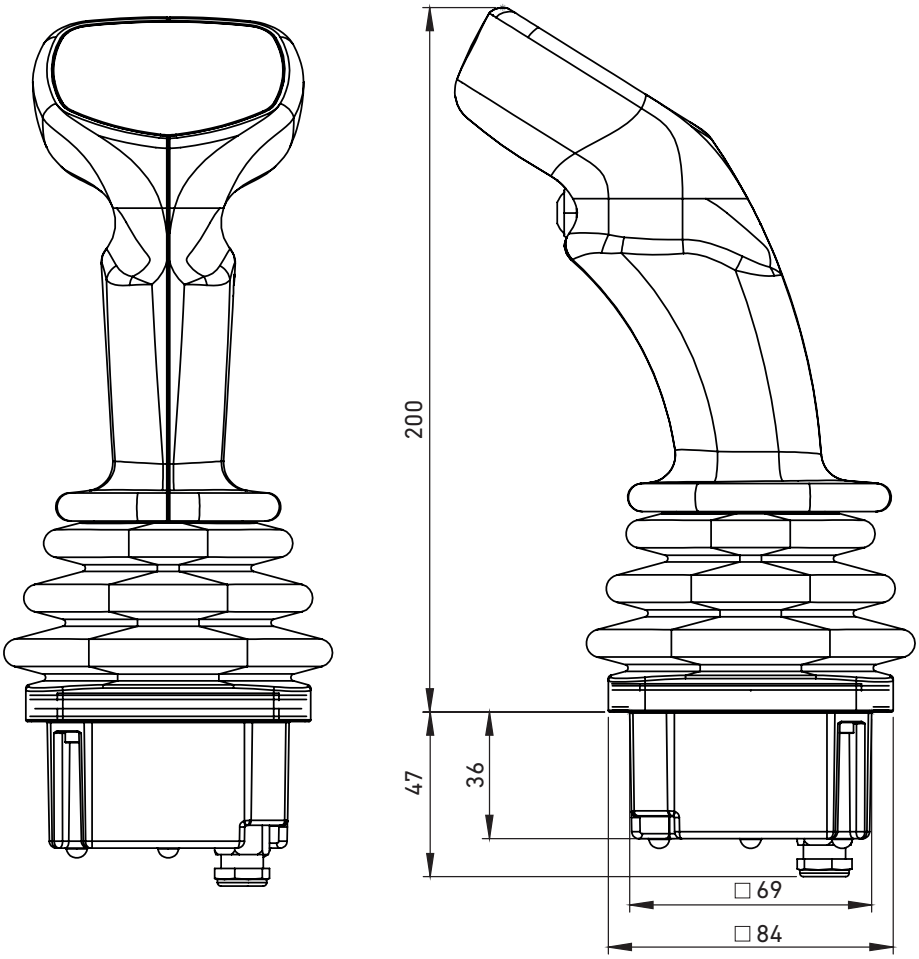

Panel arrangements

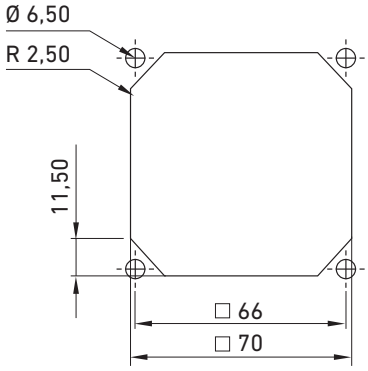

Lever operation

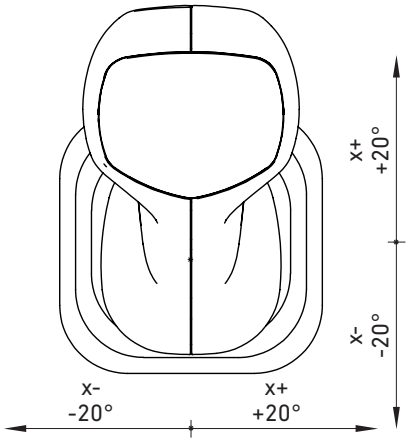

Limiter

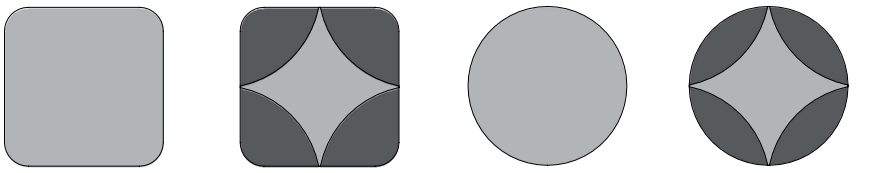

Square | Square, soft guided feel | Round | Round, soft guided feel

Thumb plate configuration

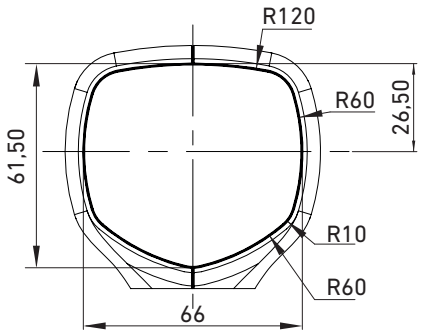

All dimensions in mm

Metallux cannot picture the customer's operating and application conditions and the customer's existing environmental influences.
We therefore recommend that you carry out your own investigations into the planned use of the products under the actual operating conditions.

We continuously improve our products and also update our data sheets regularly. In this respect, there may be changes in the specification.
These changes will apply to orders received by us from the time of the update, unless otherwise agreed.

Our products comply with Directive 2011/65/EU (RoHS) including Directive 2015/863/EU and Regulation (EC) No. 1907/2006 (REACH).

HAND JOYSTICK MJ-H10 (prev. MJ-30K)

Product codes for orders

	X-axis	Y-axis	Z-axis
	X_ _ _ _	Y_ _ _ _	Z0 00 A00
Sensor technology			
0 None	0	0	
H Hall	H	H	
P Potentiometer	P	P	
Interface			
00 None	00	00	
01 Potentiometer 0 – 100 % with directional switch	01	01	
02 Potentiometer 0 – 100 % with directional switch and center contact	02	02	
03 Potentiometer 0 – 100 % redundant	03	03	
04 Potentiometer 0 – 100 % redundant, center contact	04	04	
05 Potentiometer 0 – 100 % reverse redundant	05	05	
06 Potentiometer 0 – 100 % reverse redundant, center contact	06	06	
07 Potentiometer 10 – 90 % with directional switch	07	07	
08 Potentiometer 10 – 90 % with directional switch and center contact	08	08	
09 Potentiometer 10 – 90 % redundant	09	09	
10 Potentiometer 10 – 90 % redundant, center contact	10	10	
11 Potentiometer 10 – 90 % reverse redundant	11	11	
12 Potentiometer 10 – 90 % reverse redundant, center contact	12	12	
15 Potentiometer Gray Code and center contact	15	15	
16 Hall ratiometric 0.5 – 4.5 V	16	16	
17 Hall ratiometric 0.5 – 4.5 V, redundant	17	17	
18 Hall ratiometric 0.5 – 4.5 V, reverse redundant	18	18	
19 SPI	19	19	
20 CANOpen	20	20	
21 SAE J1939	21	21	
24 PWM	24	24	
26 Potentiometer 7.5 – 92.5 % with directional switch	26	26	
99 Custom	99	99	
Mechanical option			
A00 None	A00	A00	
A01 Spring return to center	A01	A01	
A02 Spring return to center, reduced operating force	A02	A02	
A99 Custom	A99	A99	
Limiter			
B00 None			B00
B01 Square			B01
B02 Square, soft guided feel			B02
B03 Round			B03
B04 Round, soft guided feel			B04
B99 Custom			B99
Electrical connection			
C00 None			C00
C03 Cable			C03
C99 Custom			C99
Handle design			
D00 No handle, only base			D00
D09 Handle MJ-H10			D09
D99 Custom			D99
Handle function			
E00 None			E00
E06 Configurable control panel			E06
E99 Custom			E99

Explanation of Product Codes: Each product code begins with the model name. After that, for each axis, the sensor technology, the interface, and the mechanical option are specified. This is followed by the limiter, the electrical connection, the handle design, and the handle function. The control panel is configured according to customer requirements and must be specified separately.

Example for the Product Code of a typical MJ-H10: MJ-H10_XH18_A01_YH18_A01_Z000_A00_B02_C03_D09_E06
XH18_A01: X-axis Hall ratiometric 0.5 – 4.5 V reverse redundant, spring return to center
YH18_A01: Y-axis Hall ratiometric 0.5 – 4.5 V reverse redundant, spring return to center
Z000_A00: No Z-axis
B02_C03_D09_E06: Square limiter, soft guided feel, Cable, Handle MJ-H10, Configurable control panel