MEMBRANE SENSOR MTP-R

This analog and absolute measuring, low-wear membrane sensor is characterized by its good resolution and hermetically sealed design. Contact is achieved via a spring loaded pin.

This product offers a high degree of customization.

Advantages
– Adjustable measuring range: 25°–345°
– Simple assembly, self-adhesive
– Particularly flat design, less than 1 mm thick
– Good resolution, precision and measurement accuracy

Application examples
– Camera systems
– Operating tables
– Servo systems
– Valve adjustment



General data	
Sensor technology	Potentiometric
Type of contact	Spring loaded pin
Sensor type	Absolute measuring
Circuit	As voltage divider

Electrical data	
Measuring range	25° – 345°, adjustable
Independent linearity	± 2 %
Resolution	Analog
Resistance range (Rn)	2.5 kΩ per 25 mm circumference
Resistance tolerance	± 30 %
Max. Wiper current	5 mA in case of malfunction
Supply voltage	5 VDC typ., 3 to 30 VDC possible
Output signal	Analog 0 to 100 % of supply voltage

Mechanical data	
Dimensions	See drawings
Sensor thickness	0.8 mm
Travel speed	1 m/sec
Actuation force	1 to 3 N
Spring loaded pin	With spring-loaded POM ball, external thread M6
Mounting	Self-adhesive
Lifetime	> 5 million cycles

Environmental data	
Operating temperature	-25 °C to +85 °C
Protection class acc. to IEC 60529	IP 65*
EMC	Uncritical
ESD	Uncritical

Material	
Basic material	Polyester Other materials on request
Spring loaded pin	Stainless steel and POM ball

Electrical connection	
	Crimp contact Connector Solder pad Pitch 2.54 mm

* except for electrical connection and connector

MEMBRANE SENSOR MTP-R

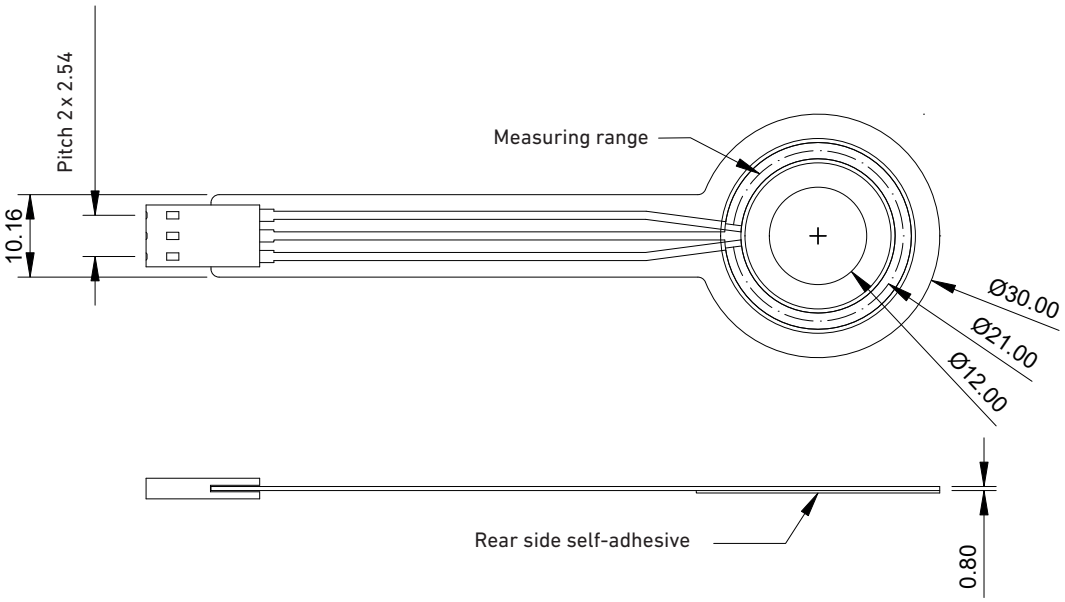

All dimensions in mm

Installation instructions

To install the sensor, remove the protective film on the rear side.
To ensure proper installation and function, the surface to which the sensor is to be applied must meet the following properties:
– be flat and smooth
– be free of moisture, oil, grease, and dust

Please use a suitable cleaning agent, for example, isopropanol or MEK, to clean the carrier material. Avoid temperature differences between the sensor and the carrier material.

Adhesive tape: The recommended processing temperature is 18°C to 35°C.

Storability is 2 years at room temperature and a humidity of 50 to 70%.

Spring loaded pin

Metallux spring loaded pin with POM ball
Article No. H959000000

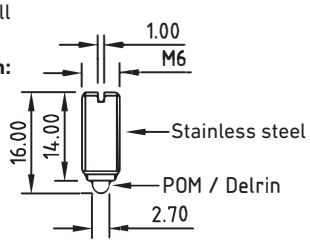

Requirements for the spring loaded pin:
– The contact surface of the ball should preferably be made of POM to achieve low friction coefficients
– Recommended ball diameter: 3 to 10 mm
– Recommended actuation force: approx. 1 to 3 N

When selecting the spring loaded pin, consider the sensor width, foil material, and travel speed.

Electrical connection

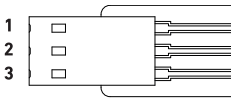

Connector

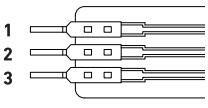

Solder pad / Crimp contact

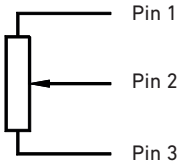

Sample order

Article No.	Product name	Measuring range	Electrical Connection
E080200345	MTP-R	345°	Crimp contact
H959000000	Spring loaded pin		

Metallux cannot picture the customer's operating and application conditions and the customer's existing environmental influences.
We therefore recommend that you carry out your own investigations into the planned use of the products under the actual operating conditions.

We continuously improve our products and also update our data sheets regularly. In this respect, there may be changes in the specification.
These changes will apply to orders received by us from the time of the update, unless otherwise agreed.

Our products comply with Directive 2011/65/EU (RoHS) including Directive 2015/863/EU and Regulation (EC) No. 1907/2006 (REACH).