HALL POTENTIOMETER POH 120 WITH AXIS

This absolute rotary sensor based on Hall technology operates contactlessly. This allows even the smallest changes in angle to be reliably detected.

Advantages
– Freely programmable rotation angle from 0° to 360°
– Very small housing diameter of just 13 mm
– High resolution, precision, and measurement accuracy
– Insensitive to vibrations

Application Examples
– Joysticks
– Valve flap control
– Angle measurement in vehicles
– Servo systems



General Data	
Sensor technology	Hall technology
Type of contact	Magnet
Sensor type	Absolute measuring

Electrical Data	
Measuring range	0° – 360°, freely programmable
Independent linearity	± 0.5 %
Resolution	12 bit <0.1°
Current consumption without load	8.5 mA typ.
Supply voltage	5 VDC ± 10 %
Output signal	Analog 10 to 90 % of supply voltage
Min. ohmic load at output	10 kΩ
Max. capacitive load at output	10 nF
Max. load current at output	11 mA

Mechanical Data	
Dimensions	See drawing
Bearing	Slide bearing
Lifespan	> 10 years
Mounting	Servo flange

Environmental Data	
Operating temperature	-40 °C to +85 °C
Protection class acc. to IEC 60529	IP 65
EMC	Uncritical
ESD	Uncritical

Material	
Housing	Stainless steel Other materials on request
Axis	Brass nickel plated

Electrical Connection	
	Tinned cable wires Cable length approx. 340 mm Others on request

HALL POTENTIOMETER POH 120 WITH AXIS

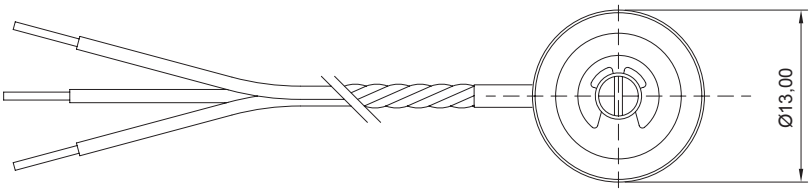

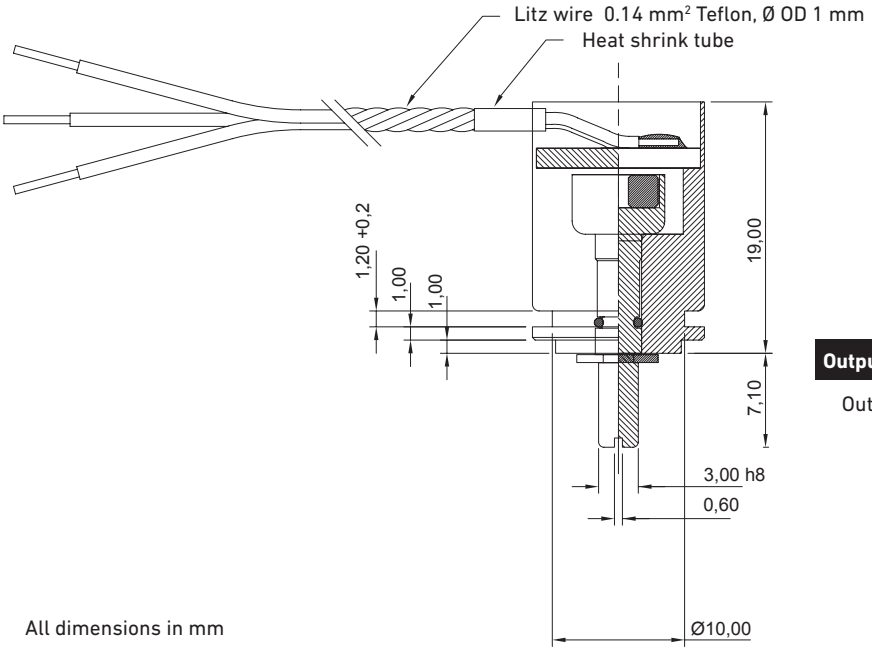

All dimensions in mm

Output signal

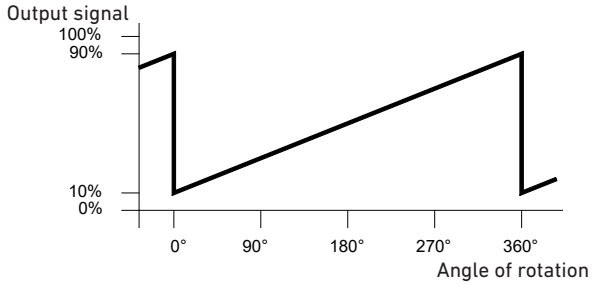

Electrical Connection

green out

orange +5 Volt

grey Gnd

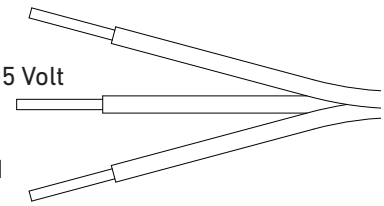

Installation suggestion

The POH 120 can be mounted via the servo flange using a retaining clip. The retaining clip is not included.

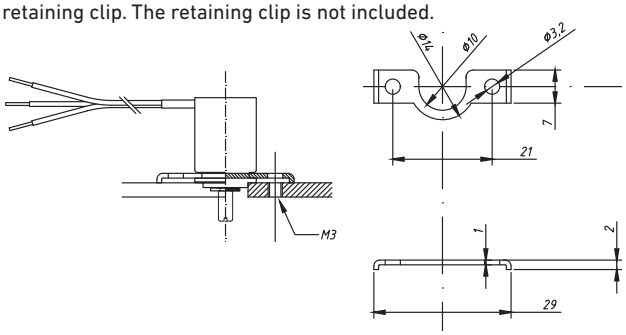

Sample order

Article No.	Product name	Measuring range	Electrical connection
E050200120	POH 120 with axis	360°	Litz wire

Metallux cannot picture the customer's operating and application conditions and the customer's existing environmental influences.
We therefore recommend that you carry out your own investigations into the planned use of the products under the actual operating conditions.

We continuously improve our products and also update our data sheets regularly. In this respect, there may be changes in the specification.
These changes will apply to orders received by us from the time of the update, unless otherwise agreed.

Our products comply with Directive 2011/65/EU (RoHS) including Directive 2015/863/EU and Regulation (EC) No. 1907/2006 (REACH).