POWER WIRE RESISTOR PWR-EF

This aluminium housed resistor is suitable for a wide range of applications thanks to its compact design.

Customer-specific designs and assemblies are available on request. A temperature switch can be integrated.

Advantages
- High pulse stability
- Optimised thermal conduction
- High degree of protection

Applications
- Charge, discharge and braking resistor for drive and automation technology
- Earthing resistor
- Protective resistor



Electrical Data	
Resistance Range	Freely selectable, see table
Tolerances	±5 % (R > 5 Ω) ±10 % (R = 1 – 5 Ω) ±20 % (R < 1 Ω) Further values on request
Temperature coefficient	±150 ppm / °C
Insulation resistance	≥10000 MΩ (500 V, 25 °C, 75 % RH)
Testing voltage	4000 VAC
Voltage limit	$\sqrt{(P \times R)}$
Stability	1000 h bei 25 °C, ΔR ±5 %
Inductance	< 0.5 mH at 1 kHz
Parasitic capacitance	< 75 pF at 20 kHz

Mechanical Data	
Dimensions	See table
Mounting positions	See drawing

Environmental Data	
Operating temperature	-50 °C to +200 °C, max. 250 °C
Storage temperature	0 °C to +85 °C at 80 % RH max. for min. 12 months
Degree of protection acc. to IEC 60529	IP 65

Overview

	Power without Heatsink $P_{NED = 30\,\%}$	$P_{NED = 100\,\%}$	Power with Heatsink P_N	Resistance Range		Operating Voltage	Dimensions L1	Weight
Type	**W**	**W**	**W**	**Min. Ω**	**Max. Ω**	**V**	**mm**	**g**
PWR-EF 70	105	35	70	1.0	180	750	56	85
PWR-EF 110	165	55	110	2.0	470	1000	106	145
PWR-EF 170	255	85	170	3.0	750	1500	156	210

Mechanical tolerances acc. to ISO 2768-m

POWER WIRE RESISTOR PWR-EF

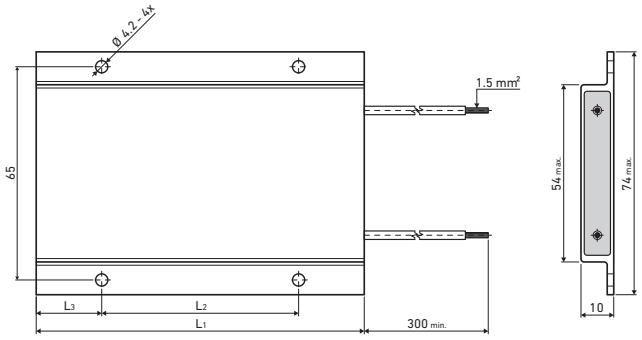

Mounting positions

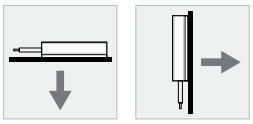

Mounting on a heatsink further improves heat dissipation and increases power of the resistors.

Pulse load – Depending on time and resistance value

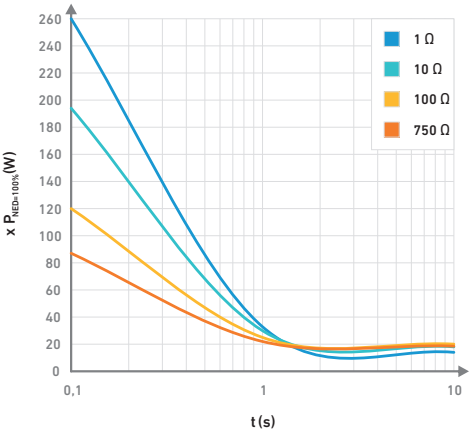

Adiabatic pulse – Depending on resistance value and time

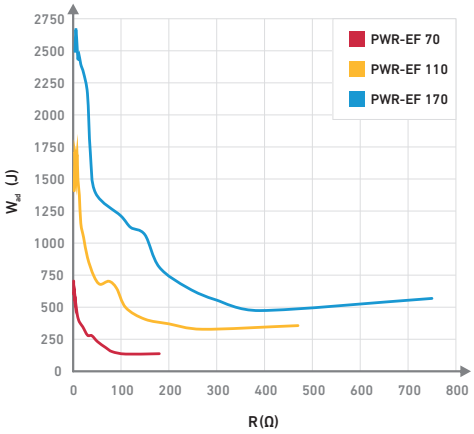

Derating – Depending on ambient temperature

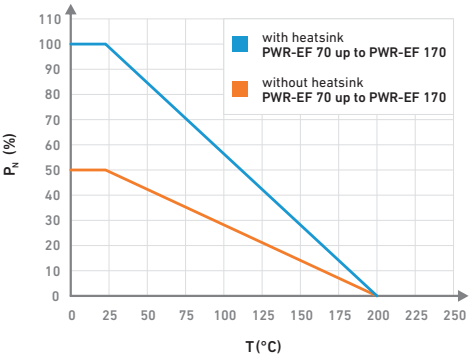

Surface temperature – Depending on load

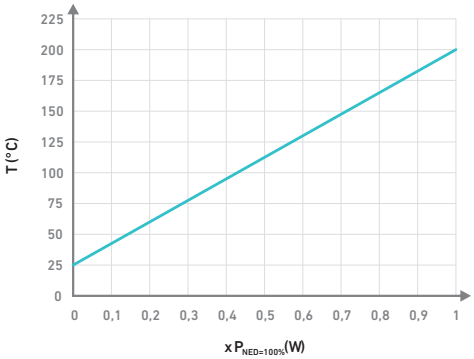

Electrical Connection

Cable	Standard: UL1199 AWG16 600 V 200 °C Cable length 300 mm Optional: UL3071 AWG16 600 V 200 °C UL10203 AWG16 1000 V 200 °C UL10371 AWG16 1000 V 250 °C Other connections and lengths on request

Options

Available with temperature switch

Order designation

To place an order we need the following information

Type	Temperature Switch	Resistance value	Tolerance	Cable length
PWR-EF 70	T	Please specify	±5 % (J)	Please specify
PWR-EF 110	–		±10 % (K)	
PWR-EF 170			±20 % (M)	

Metallux cannot picture the customer's operating and application conditions and the customer's existing environmental influences.
We therefore recommend that you carry out your own investigations into the planned use of the products under the actual operating conditions.

We continuously improve our products and also update our data sheets regularly. In this respect, there may be changes in the specification.
These changes will apply to orders received by us from the time of the update, unless otherwise agreed.

Our products comply with Directive 2011/65/EU (RoHS) including Directive 2015/863/EU and Regulation (EC) No. 1907/2006 (REACH).