POTENTIOMETER ELEMENT ROTARY

This analog conductive plastic potentiometer element provides absolute measurement and is used as a position sensor.

It consists of a potentiometer element, wiper, and wiper carrier, which we design and manufacture as a customized solution for your specific application.

In addition, it is possible to equip the potentiometer element with an integrated switch.

Advantages
– Adjustable measuring range: 0–355°
– High thermal stability
– Long service life
– High resolution, precision and measurement accuracy
– Space-saving design

Application Examples
– Rotation angle detection
– In robot axes or arms of surgical and industrial robots
– In joysticks for determining the deflection angle
– For torque and speed control of power tools



General data	
Sensor technology	Potentiometric
Type of contact	Wiper
Sensor type	Absolute measuring
Circuit	As voltage divider

Electrical data	
Measuring range	0° – 355°, adjustable
Independent linearity	± 2 %, ± 0.25 % optional
Resolution	Analog, near-infinite
Resistance range	5 kΩ, 10 kΩ
Resistance tolerance	± 20 %
Max. Wiper current	5 mA in case of malfunction
Supply voltage	5 VDC typ., 3 to 30 VDC possible
Output signal	Analog 0 to 100 % of supply voltage

Mechanical data	
Dimensions	Customizable
Sensor thickness	1.5 mm Others on request
Travel speed	2 m/sec
Mounting	Self-adhesive, screw
Lifetime	Up to 50 million cycles*

Environmental data	
Operating temperature	-40 °C to +125 °C
Protection class acc. to IEC 60529	–
EMC	Uncritical
ESD	Uncritical

Material	
Basic material	FR4 Other materials on request
Resistance material	Conductive plastic
Metallux wiper	Noble metal alloy

Electrical connection	
	Solder pad Pitch 2.54 mm

* Only valid in conjunction with Metallux wipers and with correct application of the Metallux Design Rules

POTENTIOMETER ELEMENT ROTARY

Front

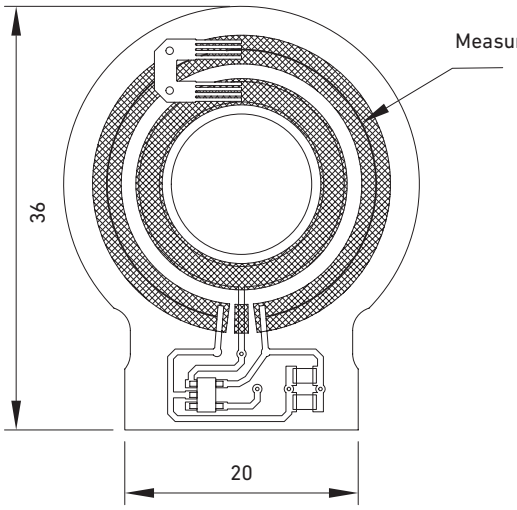

Back

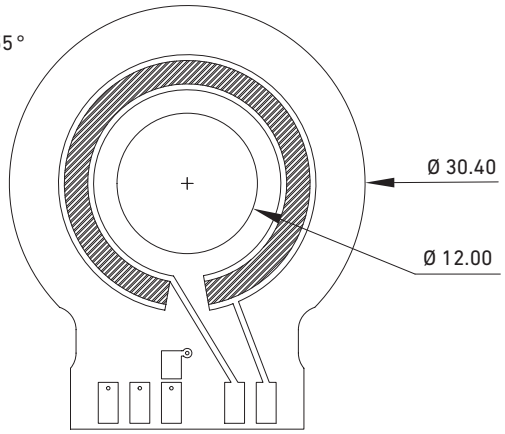

All dimensions in mm

Installation instructions

To install the sensor, remove the protective film on the rear side. To ensure proper installation and function, the surface to which the sensor is to be applied must meet the following properties:
– be flat and smooth
– be free of moisture, oil, grease, and dust

Please use a suitable cleaning agent, for example, isopropanol or MEK, to clean the carrier material. Avoid temperature differencies between the sensor and the carrier material.

Adhesive tape: The recommended processing temperature is 18°C to 35°C.

Storability is 2 years at room temperature and a humidity of 50 to 70%.

Wiper and wiper carrier

We offer two different wiper sizes, depending on the specific element or available space. The wiper carrier is adapted to the application and is therefore always customized. We handle the design for you.

Wiper 1

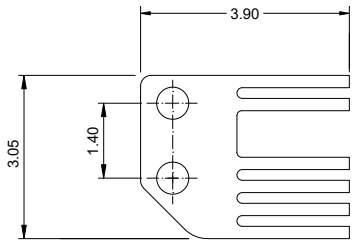

Wiper 2

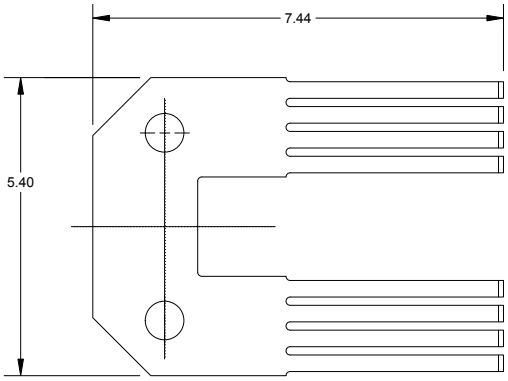

Electrical connection

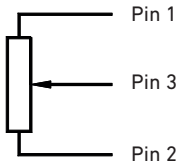

Sample order

Article no.	Product name	Measuring range	Electrical connection
E040200216	Potentiometer element	350°	Solder pad
H903560002	Wiper 2		

Metallux cannot picture the customer's operating and application conditions and the customer's existing environmental influences.
We therefore recommend that you carry out your own investigations into the planned use of the products under the actual operating conditions.

We continuously improve our products and also update our data sheets regularly. In this respect, there may be changes in the specification.
These changes will apply to orders received by us from the time of the update, unless otherwise agreed.

Our products comply with Directive 2011/65/EU (RoHS) including Directive 2015/863/EU and Regulation (EC) No. 1907/2006 (REACH).