STAINLESS STEEL PRESSURE CELL SPS 3003

This monolithic stainless steel pressure measuring cell is suitable for measuring gauge pressure from 40 up to 1000 bar.

Available as a Z variant with signal amplification (see SPS 3003 Z).

Advantages
– Very good media resistance
– High bursting strength
– Good long-term stability
– Compact design

Application examples
– Pumps
– High-pressure cleaners
– Hydraulic systems
– Hydrogen applications



General data	
Sensor technology	Piezoresistive, Wheatstone bridge
Sensor type	Monolithic, gauge pressure

Electrical data	
Pressure range	40 to 1000 bar
Supply voltage	3 – 30 VDC
Output signal	Analog
Process connection	G 1/4
Offset	0 ±0.5 mV/V
Temperature Coefficient of Span	0 to -0.02 % FS/K (0 – 70 °C)
Temperature Coefficient of Offset	0 ± 0.03 % FS/K (25 to 85 °C)

Mechanical data	
Dimensions	See drawing
Diameter	HEX 22
Pitch	2.54 mm
Weight	< 34 g

Environmental data	
Operating temperature	-40 to +125 °C*
Storage temperature	-40 to +125 °C

*The operating temperature range may vary depending on the electrical connection.

Material	
Sensor body	Stainless steel 1.4404

Electrical connection
Solder pad tinned
Solder pin
Cable
Others on request

Nominal pressure		40 bar	100 bar	200 bar	300 bar	400 bar	600 bar	1000 bar
Gauge pressure		•	•	•	•	•	•	•
Overpressure*	bar	≤ 60	≤ 150	≤ 300	≤ 450	≤ 600	≤ 900	≤ 1350
Burst pressure	bar	≥ 10 x Pnom	≥ 10 x Pnom	≥ 10 x Pnom	≥ 10 x Pnom	≥ 10 x Pnom	≥ 10 x Pnom	≥ 10 x Pnom
Vacuum strength	bar	-1	-1	-1	-1	-1	-1	-1
Accuracy** typ./max	% FS	0.5 / 0.9	0.4 / 0.8	0.4 / 0.8	0.4 / 0.8	0.4 / 0.8	0.4 / 0.8	0.4 / 0.8

* The specified overpressure ensures correct functioning of the cell in the event of overload. Duration of overpressure < 1 s
** Basis of calculation:

$$\text{Accuracy} = \sqrt{\text{Nonlinearity}^2 + \text{Hysteresis}^2 + \text{Nonrepeatability}^2}$$

STAINLESS STEEL PRESSURE CELL SPS 3003

Dimensions

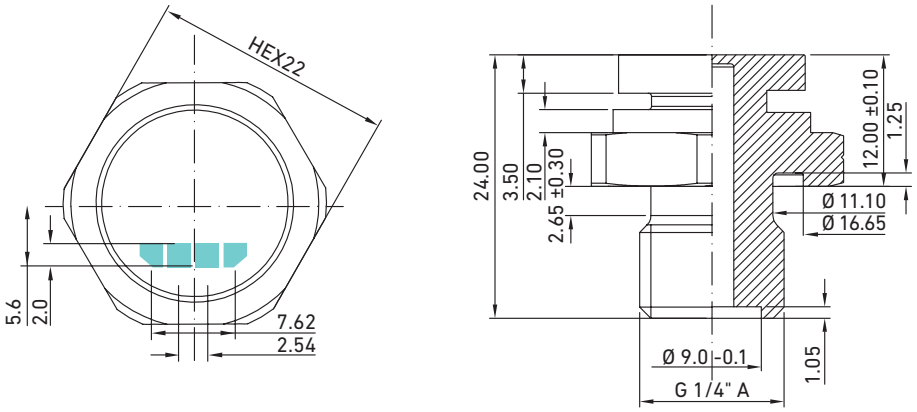

Mounting proposal

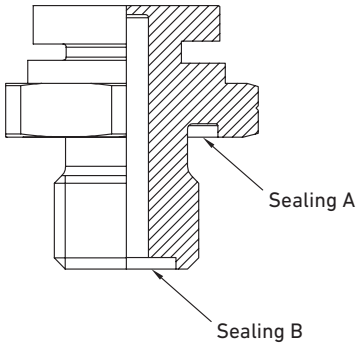

Connection diagram

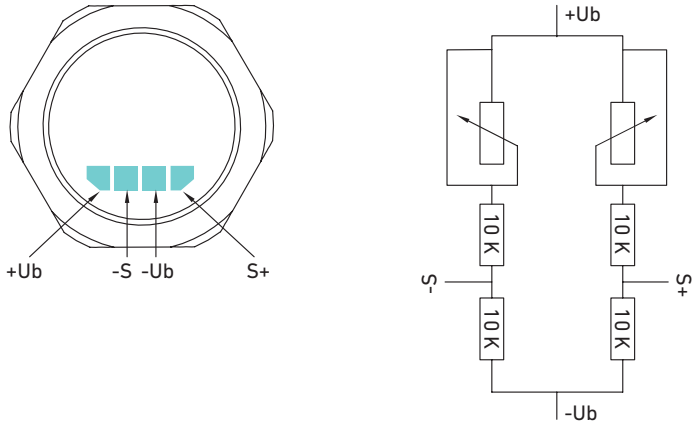

Electrical connection

Solder pad tinnned

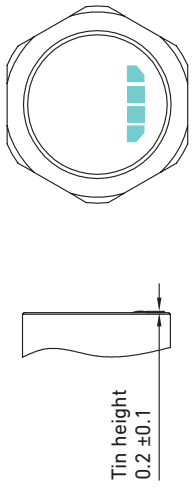

Cable

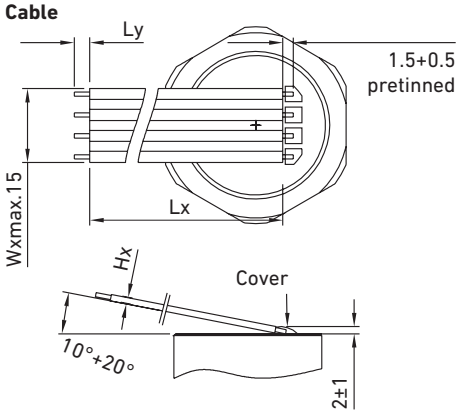

Solder pin

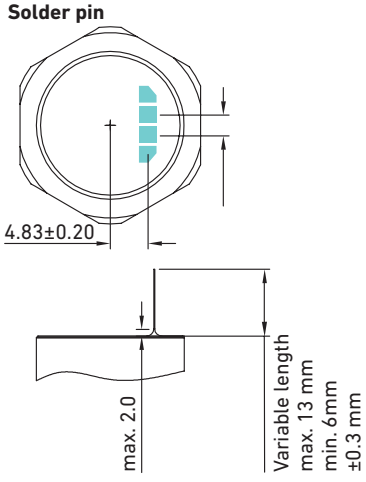

All dimensions in mm

Metallux cannot picture the customer's operating and application conditions and the customer's existing environmental influences.
We therefore recommend that you carry out your own investigations into the planned use of the products under the actual operating conditions.

We continuously improve our products and also update our data sheets regularly. In this respect, there may be changes in the specification.
These changes will apply to orders received by us from the time of the update, unless otherwise agreed.

Our products comply with Directive 2011/65/EU (RoHS) including Directive 2015/863/EU and Regulation (EC) No. 1907/2006 (REACH).